MD-200 Series Hardware User's Manual

Edition 2.0, February 2017

www.moxa.com/product

MD-200 Series Hardware User's Manual

Copyright Notice

Trademarks

Disclaimer

Information in this document is subject to change without notice and does not represent a commitment on the part of Moxa.

Moxa provides this document as is, without warranty of any kind, either expressed or implied, including, but not limited to, its particular purpose. Moxa reserves the right to make improvements and/or changes to this manual, or to the products and/or the programs described in this manual, at any time.

Information provided in this manual is intended to be accurate and reliable. However, Moxa assumes no responsibility for its use, or for any infringements on the rights of third parties that may result from its use.

This product might include unintentional technical or typographical errors. Changes are periodically made to the information herein to correct such errors, and these changes are incorporated into new editions of the publication.

Technical Support Contact Information

www.moxa.com/support

Moxa Americas
Toll-free: 1-888-669-2872
Tel: +1-714-528-6777
Fax: +1-714-528-6778

Moxa China (Shanghai office)
Toll-free: 800-820-5036
Tel: +86-21-5258-9955
Fax: +86-21-5258-5505

Moxa Europe
Tel: +49-89-3 70 03 99-0
Fax: +49-89-3 70 03 99-99

Moxa Asia-Pacific
Tel: +886-2-8919-1230
Fax: +886-2-8919-1231

Moxa India
Tel: +91-80-4172-9088
Fax: +91-80-4132-1045

Table of Contents

1

Introduction

The MD-200 series displays are designed to meet the demands of the marine industry. With full range dimming, optical bonding (optional), and wide angle viewing, these computer display terminals meet the required marine standards and are perfectly suited for a variety of marine applications, both indoors and outdoors. In addition, these displays use either AC or DC power inputs, simplifying the installation of the displays at field sites.

The MD-200 series displays are compliant with various industrial marine standards, including IEC 60945, DNV, and IACS-E10, lending greater credence to their suitability for maritime operations.

There are three models in the MD-200 series displays: MD-219, MD-224, and MD-226. The main differences among the models are in the panel size, display aspect ratio, and pixel resolution. Unless otherwise specified, all information and functions described in the manual apply to all models.

This chapter includes the following topics:

- **Overview**
- **Ordering Information**
- **Package Checklist**
- **Product Features**
- **Hardware Specifications**
  - MD-226 Hardware Specifications
  - MD-224 Hardware Specifications
  - MD-219 Hardware Specifications
  - Safety Information

Overview

Designed for durably reliable service as an ECDIS (Electronic Chart Display and Information System) display component, the MD-200 series displays provide full range dimming and optional optical bonding, making the displays well-suited not only for ECDIS applications, but also for a variety of other bridge applications.

The MD-200 series displays feature both AC and DC power inputs, and can be conveniently installed on any bridge, without the need for extra hardware.

Moxa's marine displays are compliant with industrial marine standards, such as IEC 60945, DNV, and IACS-E10, giving strong assurance of their suitability for marine applications.

Ordering Information

Available Models

MD-226X: 26-inch display with 16:10 aspect ratio, 1920 x 1200 resolution, LED backlighting, RS-232/422/485 serial ports, dual-power supply (AC/DC).

MD-224X: 24-inch display, 16:9 aspect ratio, full HD (1920x1080), LED backlighting, RS-232/422/485 serial ports, dual power input (AC/DC).

MD-224Z: 24-inch display, 16:9 aspect ratio, full HD (1920x1080), projected-capacitive touch panel, LED backlighting, RS-232/422/485 serial ports, dual power input (AC/DC).

MD-219X: 19-inch, 5:4 aspect ratio display (1280x1024), LED backlight, DVI-D/VGA, RS-232/422/485 serial ports, dual power input (AC/DC).

MD-219Z: 19-inch, 5:4 aspect ratio display (1280x1024), projected capacitive multi-touch, LED backlight, DVI-D/VGA, RS-232/422/485 serial ports, dual power input (AC/DC).

Optional Accessories (sold separately)

- Desktop mounting kit
- Panel mounting clamps
- VESA mounting kit

Package Checklist

Each model is shipped with the following items:

- One MD-200 series display
- One VGA cable
- One DVI-D cable
- One 2-pin terminal block
- Two 5-pin terminal block
- Documentation and software CD
  (Note: High brightness models MD-219Z-HB and MD-224Z-HB do not come with a software CD.)
- Quick installation guide (printed)
- Warranty card

NOTE If any of the above items are missing or damaged, contact your sales representative.

Product Features

The MD-200 series displays include the following features:

- 26-inch display (MD-226X), 24-inch display (MD-224X/MD-224Z), or 19-inch display (MD-219X/MD-219Z)
- Color calibrated for ECDIS compliance
- Fanless design
- SavvyTouch display controls
- RS-232 and RS-422/485 serial ports for sending UART commands to configure display settings
- Dual AC/DC power input
- (Available upon request) Optically bonded model

Hardware Specifications

This section includes the hardware specifications for each MD-200 series display model.

MD-226 Hardware Specifications

Display

Panel Size: 26” viewable image size
Panel Type: MVA
Aspect Ratio: 16:10
Pixels: 1920 x 1200 (WUXGA)
Pixel Pitch (RGB): 0.2865 (H) x 0.2865 (V) mm
Response Time: 15 ms (gray to gray)
Contrast Ratio: 1500:1
Light Intensity: 300 cd/m^2
Viewing Angles: 176°/176°
Active Display Area: 550.08 (H) x 343.8 (V) mm
Max Colors: 16.7M / 8-bit color
Display Interface:
• 1 VGA input
• 1 DVI-D input
Resolution:
• VGA: 640 x 480
• SVGA: 800 x 600
• XGA: 1024 x 768
• SXGA: 1280 x 1024
• WSXGA+: 1920 x 1080
• WUXGA: 1920 x 1200

Serial Interface

Serial Standards: 1 RS-232 port (male DB9), 1 RS-422/485 port (Euroblock)
Optical Isolation Protection: 4 kV

Serial Signals

RS-232: TxD, RxD, DTR, DSR, RTS, CTS, DCD, GND
RS-422: TxD+, TxD-, RxD+, RxD-, GND
RS-485-2w: Data+, Data-, GND

Front Panel

LEDs: MENU, Brightness, INFO, ECDIS, Day/Dusk/Night
Smart OSD: Yes

Physical Characteristics

Housing: Aluminum sheet metal

Weight: 15.2 kg

Dimensions: 621 x 440 x 90 mm (24.45 x 17.48 x 3.57 in)

Mounting: VESA, panel, or desktop mountings

Environmental Limits

Operating Temperature: -15 to 55°C (5 to 131°F)

Storage Temperature: -20 to 60°C (-4 to 140°F)

Ambient Relative Humidity: 5 to 95% (non-condensing)

IP Rating:

• Front: IP54

• Rear: IP22

Anti-Vibration:

• 0.7 g @ DNV 2.4 (Class A), sine wave, 2-100 Hz, 1 Oct./min., 1.5 hr per axis

• 1 Grms @ DNV 2.4, random wave, 3-100 Hz, 2.5 hr per axis

• 2.1 g @ DNV 2.4 (Class C), sine wave, 2-50 Hz, 1 Oct./min., 1.5 hr per axis

Power Requirements

Input Voltage: 100 to 240 VAC, 50/60 Hz, 24 VDC

Power Consumption: 40 W (Max)

Standards and Certifications

Safety: UL 60950-1

EMC: EN 55032 Class B, EN 55024-4-2, EN 55024-4-3, EN 55024-4-4, FCC Part 15 Subpart B Class A

Marine: IEC 60945 4th, DNV, IACS E10, IEC 61174

Green Product: RoHS, cRoHS, WEEE

Warranty

Warranty Period: 1 year

Details: See www.moxa.com/warranty

MD-224 Hardware Specifications

Display

Panel Size: 24” viewable image size

Panel Type: MVA

Aspect Ratio: 16:9

Pixels: 1920 x 1080 (WSXGA+)

Pixel Pitch (RGB): 0.282 (H) x 0.282 (V) mm

Response Time: 25 ms (gray to gray)

Contrast Ratio: 5000:1

Light Intensity: 300 cd/m2

Viewing Angles: 178°/178°

Active Display Area: 531.36 (H) x 298.89 (V) mm

Max Colors: 16.7M / 8-bit color

Display Interface:

• 1 VGA input

• 1 DVI-D input

Resolution:

• VGA: 640 x 480

• SVGA: 800 x 600

• XGA: 1024 x 768

• SXGA: 1280 x 1024

• WSXGA+: 1920 x 1080 (optimal setting)

Serial Interface

Serial Standards: 1 RS-232 port (male DB9), 1 RS-422/485 port (Euroblock)

Optical Isolation Protection: 4 kV

Serial Signals

RS-232: TxD, RxD, DTR, DSR, RTS, CTS, DCD, GND

RS-422: TxD+, TxD-, RxD+, RxD-, GND

RS-485-2w: Data+, Data-, GND

Front Panel

LEDs: MENU, Brightness, INFO, ECDIS, Day/Dusk/Night

Smart OSD: Yes

Physical Characteristics

Housing: Aluminum sheet metal

Weight: 12 kg

Dimensions: 595 x 393 x 75 mm (23.42 x 15.47 x 2.95 in)

Mounting: VESA, panel, or desktop mountings

Environmental Limits

Operating Temperature: -15 to 55°C (5 to 131°F)

Storage Temperature: -20 to 60°C (-4 to 140°F)

Ambient Relative Humidity: 5 to 95% (non-condensing)

IP Rating:

• Front: IP54

• Rear: IP22

Anti-Vibration:

• 0.7 g @ DNV 2.4 (Class A), sine wave, 2-100 Hz, 1 Oct./min., 1.5 hr per axis

• 1 Grms @ DNV 2.4, random wave, 3-100 Hz, 2.5 hr per axis

• 2.1 g @ DNV 2.4 (Class C), sine wave, 2-50 Hz, 1 Oct./min., 1.5 hr per axis

Power Requirements

Input Voltage: 100 to 240 VAC, 50/60 Hz, 24 VDC

Power Consumption: 40 W (Max)

Standards and Certifications

Safety: UL 60950-1, CCC

EMC: EN 55032 Class B, EN 55024-4-2, EN 55024-4-3, EN 55024-4-4, FCC Part 15 Subpart B Class A

Marine: IEC 60945 4th, DNV, IACS E10, IEC 61174

Green Product: RoHS, cRoHS, WEEE

Warranty

Warranty Period: 1 year

Details: See www.moxa.com/warranty

MD-219 Hardware Specifications

Display

Panel Size: 19” viewable image size

Panel Type: MVA

Aspect Ratio: 5:4

Pixels: 1280 x 1024 (SXGA)

Response Time: 20 ms (gray to gray)

Contrast Ratio: 2000:1

Light Intensity: 300 cd/m2

Viewing Angles: 178°/178°

Active Display Area: 376.32 (H) x 301.06 (V) mm

Max Colors: 16.7M / 8-bit color

Display Interface: VGA input x 1, DVI-D input x 1

Resolution:

- VGA: 640 x 480
- SVGA: 800 x 600
- XGA: 1024 x 768
- XGA+: 1152 x 864
- SXGA: 1280 x 1024

Serial Interface

Serial Standards: 1 RS-232 port (DB9), 1 RS-422/485 port (terminal block)

Optical Isolation Protection: 4 kV

Serial Signals

RS-232: TxD, RxD, DTR, DSR, RTS, CTS, DCD, GND

RS-422: TxD+, TxD-, RxD+, RxD-, GND

RS-485-2w: Data+, Data-, GND

Front Panel

LEDs: MENU, Brightness, INFO, ECDIS, Day/Dusk/Night

Smart OSD: Yes

Physical Characteristics

Housing: Aluminum sheet metal

Weight: 7.8 kg

Dimensions: 429 x 387 x 75 mm (16.89 x 15.24 x 2.95in)

Mounting: VESA, panel, and desktop

Environmental Limits

Operating Temperature: -15 to 55°C (5 to 131°F)

Storage Temperature: -20 to 60°C (-4 to 140°F)

Ambient Relative Humidity: 5 to 95% (non-condensing)

IP Rating:

- Front: IP 54
- Rear: IP 22

Anti-Vibration:

- 0.7 g @ DNV 2.4 (Class A), sine wave, 2-100 Hz, 1 Oct./min., 1.5 hr per axis
- 1 Grms @ DNV 2.4, random wave, 3-100 Hz, 2.5 hr per axis
- 2.1 g @ DNV 2.4 (Class C), sine wave, 2-50 Hz, 1 Oct./min., 1.5 hr per axis

Power Requirements

Input Voltage:

- DC: 24 VDC (with tolerance from 18 to 30 VDC, 2-pin terminal block)
- AC: 100 to 240 VAC

Power Consumption: 40 W (max.)

Standards and Certifications

Safety: UL 60950-1, CCC

EMC: EN 55032 Class B, EN 55024-4-2, EN 55024-4-3, EN 55024-4-4, FCC Part 15 Subpart B Class A

Marine Standard: IEC-60945 4th, IEC-61162, IEC-61174

Marine Type Approval: DNV 2.4 and IACS E10, ABS

Green Product: RoHS, cRoHS, WEEE

Warranty

Warranty Period: 1 year

Details: See www.moxa.com/warranty

Safety Information

We recommend taking the following precautions to minimize heat build-up within the unit:

- Position the unit within ±40° of the vertical
- If (a) the unit is not positioned within ±40° of the vertical, (b) the ambient temperature exceeds 25°C, or (c) the unit is used in a location with minimal ventilation, then install an external fan to increase airflow upwards through the chassis

Important Safety Precaution

Even though the unit is rated to operate within the IEC 60945standard of -15 to 55°C for bridge applications, it is best to ensure that the ambient temperature does not exceed 25°C. Doing so will significantly increase the lifespan of your unit and reduce service costs.

2

Hardware Overview

The MD-200 series display is compact, well-designed, and ruggedized for marine applications. The intelligent SavvyTouch display control buttons allow you to see control buttons easily in low light environments and identify system hardware failures easily. Multiple serial ports allow you to configure display parameters, and the reliable and stable hardware platform lets you devote your attention to developing your applications.

This chapter includes the following topics:

- **Appearance and Layout**
  - MD-226
  - MD-224
  - MD-219
- **SavvyTouch Display Control Buttons**

Appearance and Layout

MD-226

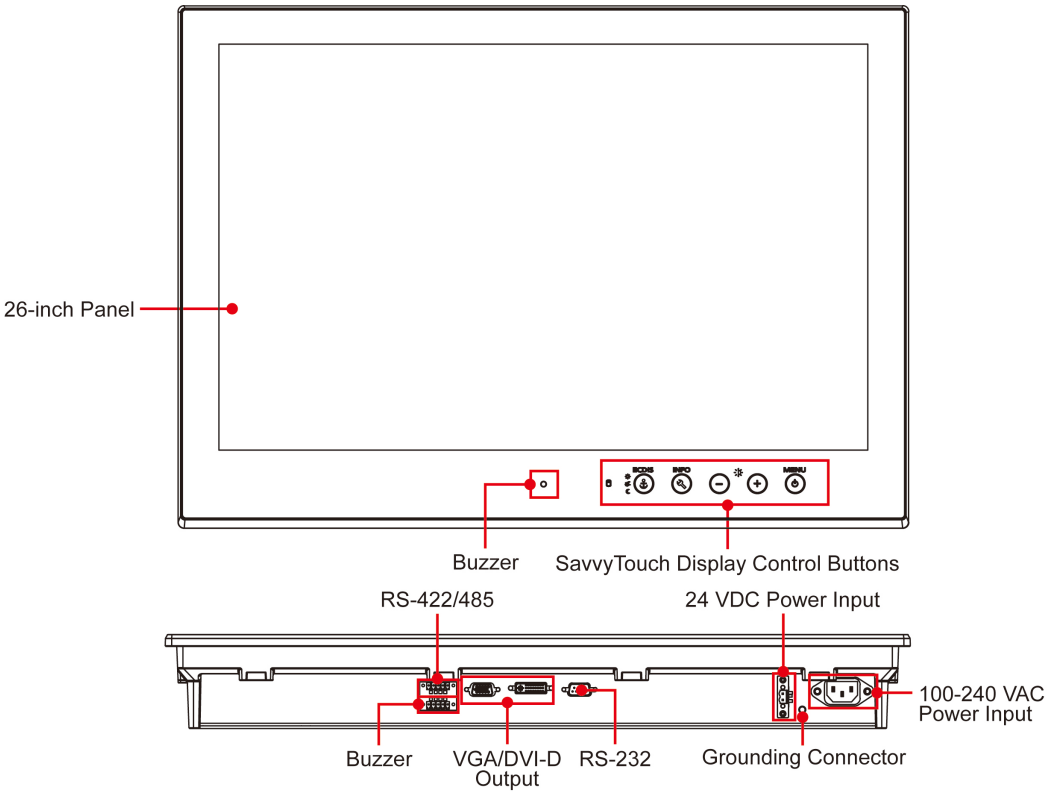

Dimensions

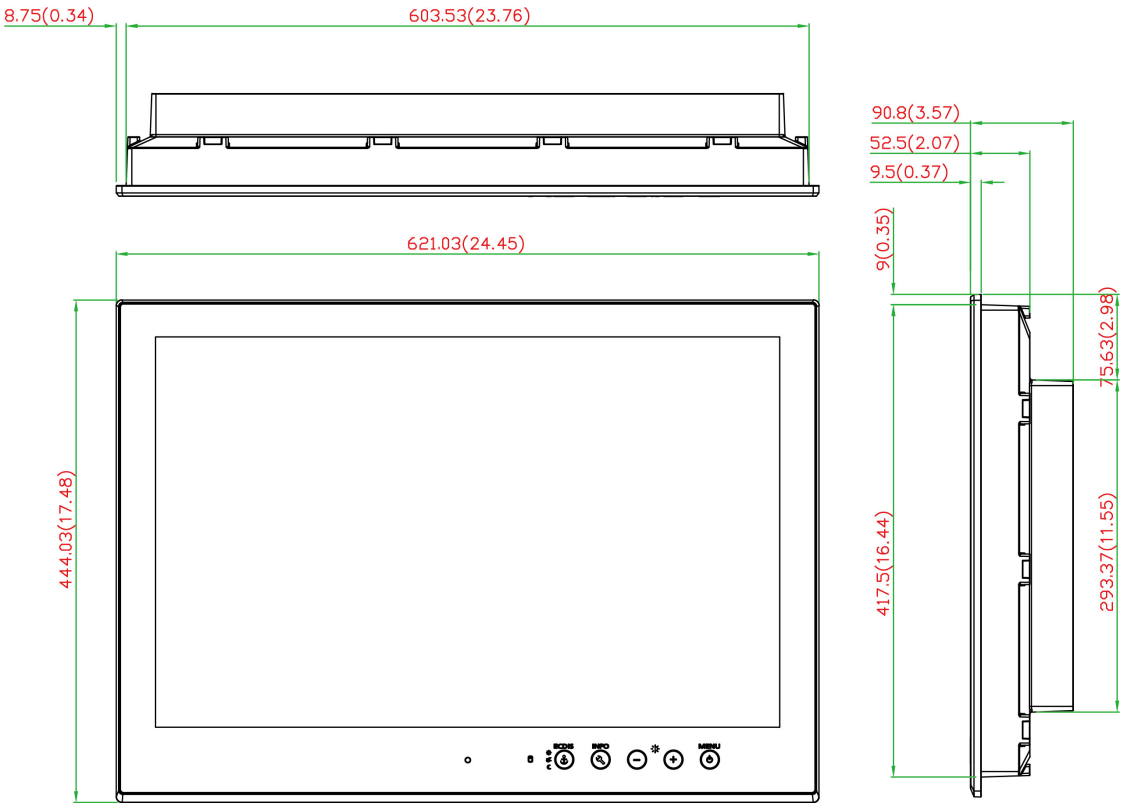

MD-224

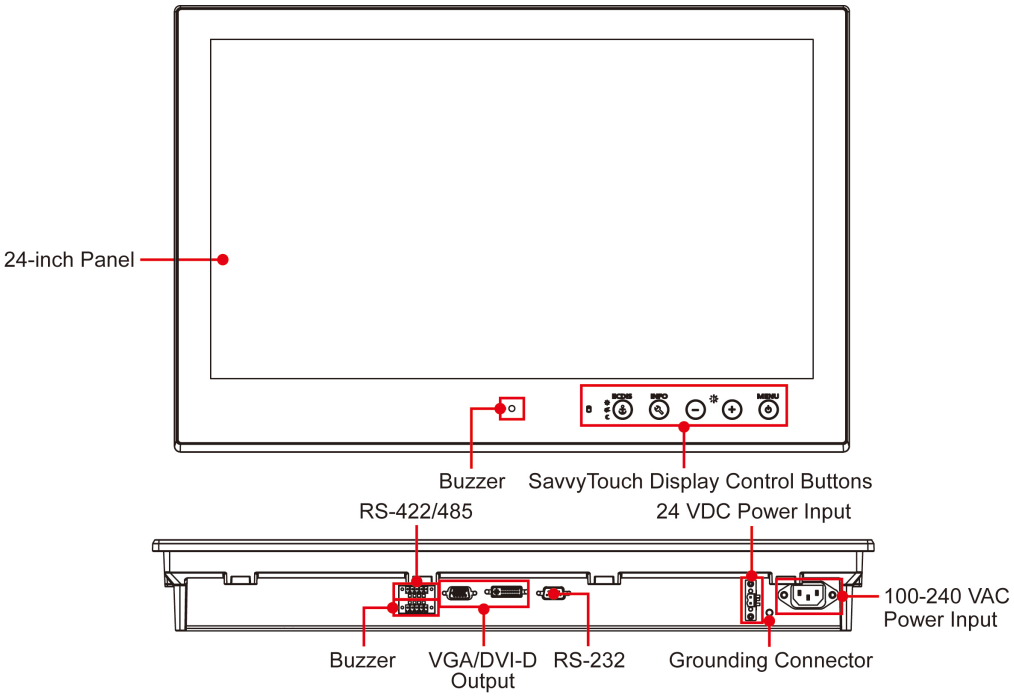

Dimensions

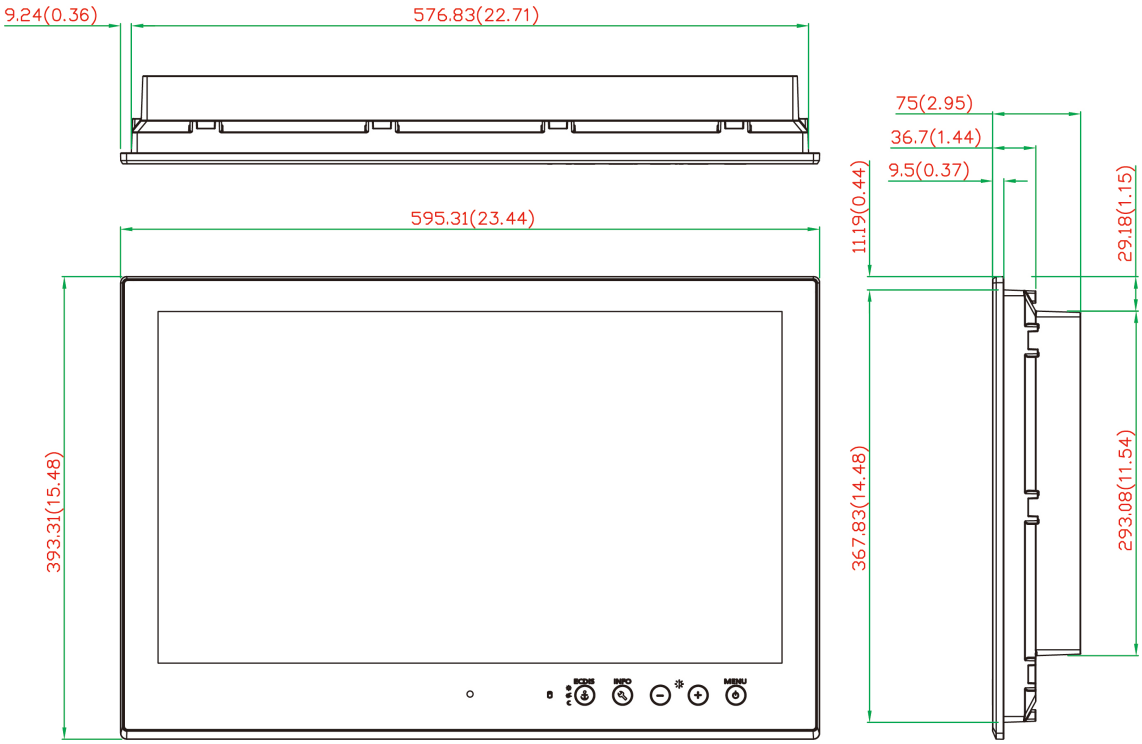

MD-219

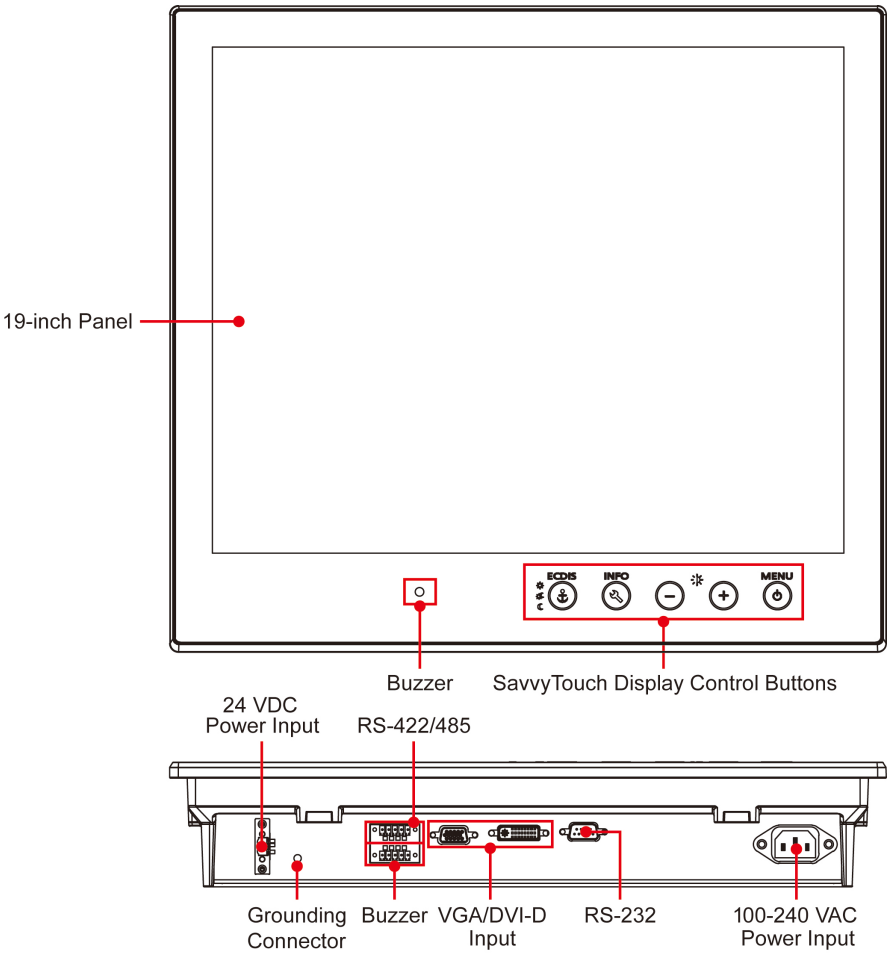

Dimensions

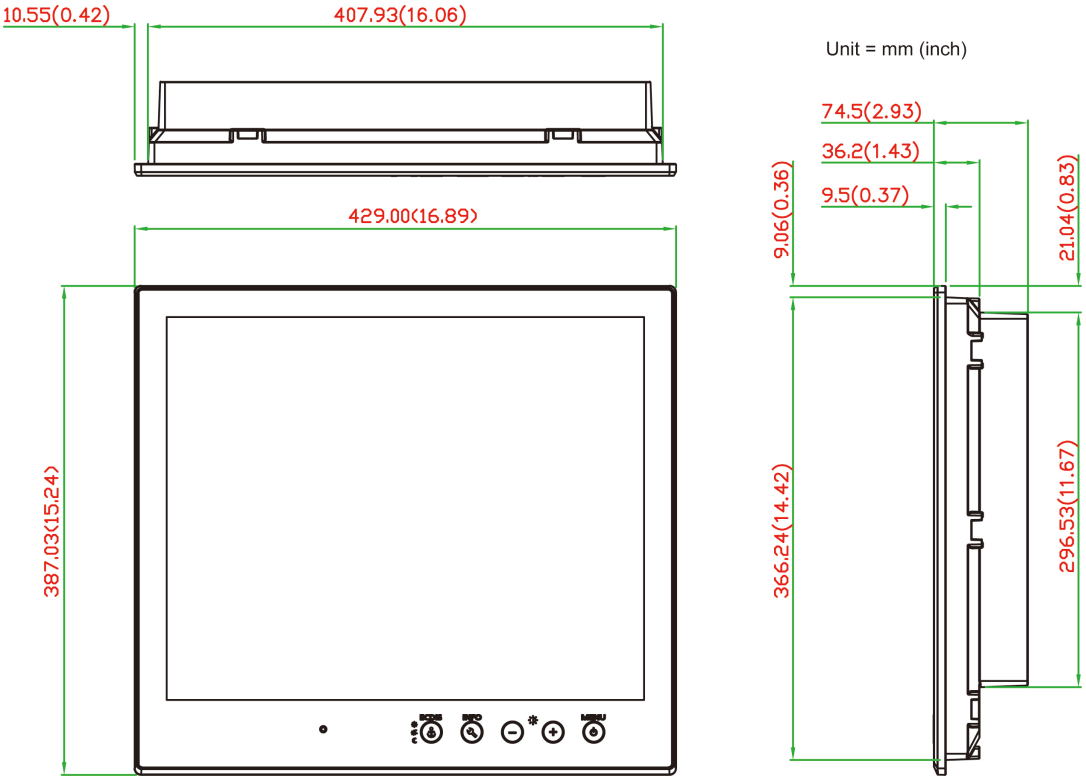

SavvyTouch Display Control Buttons

The MD-200 series display comes with SavvyTouch display control buttons located on the lower right hand corner of the front panel. These intelligent buttons light up automatically when your fingers draw near.

The following table describes the function of each button.

Name	Display Color	Control Function / Color Legend
 Menu/Power	Green	Display is powered on and functioning normally. Touch the button to show the OSD settings menu.
	Red	No input signal detected. Display on standby.
	Off	Power is down and the display is off.
 Brightness	White	+: To increase brightness of panel
		-: To decrease brightness of panel
 Info	Off	AC/DC power functioning normally
 Display mode	White	Switch between DAY/DUSK/NIGHT brightness modes
	Off	Panel brightness out of default range

3

Hardware Installation and Connection

This chapter shows you how to correctly install your MD-200 series display using various mounting kits, how to connect the cables, and how to configure display functions.

This chapter includes the following topics:

- **Placement Notes**
- **Installation Notes**
  - Desktop Mounting
  - Panel Mounting
  - VESA Mounting
- **Grounding the MD-200 Series Display**
- **Powering On the MD-200 Series Display**
- **Powering Off the MD-200 Series Display**
  - SavvyTouch Display Control Buttons
- **Connecting Data Transmission Cables**
- **Enabling the Touch Screen Function (Z models only)**
- **Connecting Video Input Cables**
- **Connecting the Built-in Buzzer**

Placement Notes

Before you install and mount the MD-200 series display, read the following notes:

1. The MD-200 series is designed for various installation or mounting methods, including desktop mounting, panel mounting, and VESA mounting. Refer to the related mechanical drawings in the following sections.
2. Good ventilation is necessary to prolong the life of the unit. The chassis heat-sink area MUST be kept clear of other heat generating items; otherwise, the motherboard may be damaged. The minimum clearance is 150 mm.
3. Allow sufficient space for proper ventilation, cable inlet or wiring installation, and maintenance purposes.
4. Do NOT install the unit in a horizontal position (laying down), since the heat from inside the unit will not dissipate effectively, resulting in damage to the LCD panel. We recommend installing the unit in a vertical position (±30 degrees) for better heat dissipation.
5. Exposure to extreme direct sunlight may cause a considerable increase in the temperature of the unit, and under certain circumstances might cause the temperature to increase beyond the recommended value. Take this into consideration when planning the placement of bridge equipment (such as sun shades, distance from the windows, and ventilation).
6. Exposure to strong vibration or acoustic noise might affect functionality and expected lifespan. During system assembly and installation, make sure that you mount the display carefully to avoid exposure to amplified vibrations.
7. For maximum safety, at least two people should work together to lift, place, and fasten the unit to its mounting point. Before you lift or move the unit, first verify that any power to the unit is turned off. In addition, make sure that you have prepared the correct screws for panel mounting.

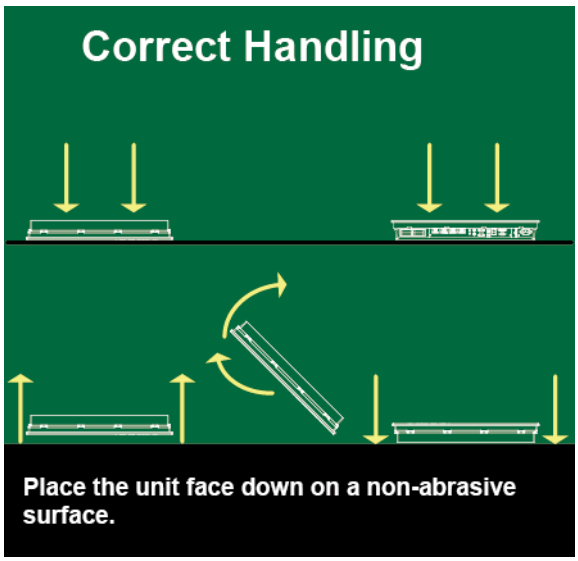

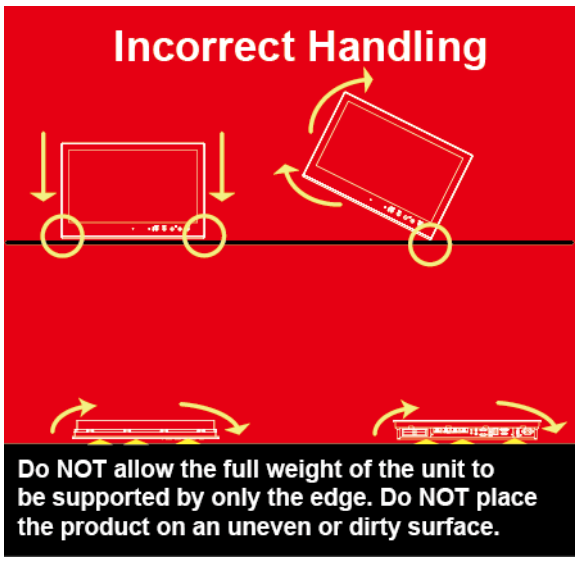

Installation Notes

Follow these steps when installing the MD-200 series display:

1. Fasten the mounting kit on the display first; then, mount the display.
2. Connect the cables (for example, DVI-D, VGA, and power cord).
3. Power on the MD-200 series display; then, power on the computer.

Desktop Mounting

The MD-200 series display comes with optional brackets that allow you to install the unit on a horizontal surface, such as a desktop. Three round screws are required for each bracket. See the following figures for detailed screw specifications and the torque values.

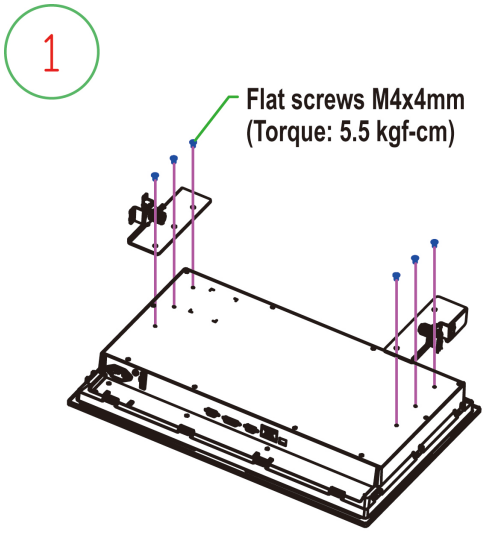

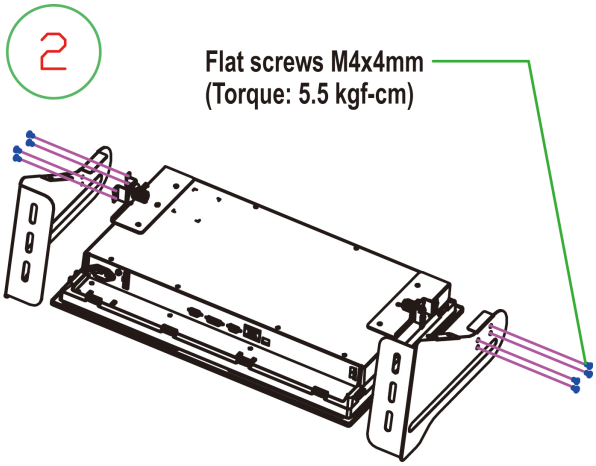

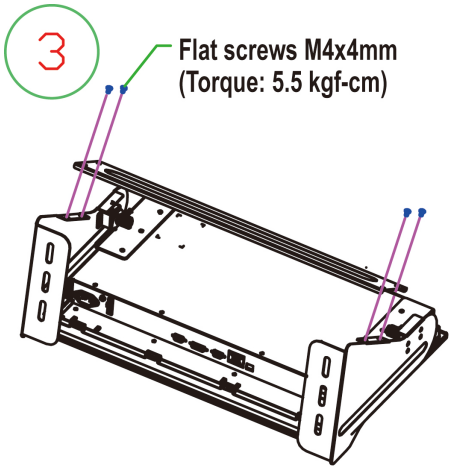

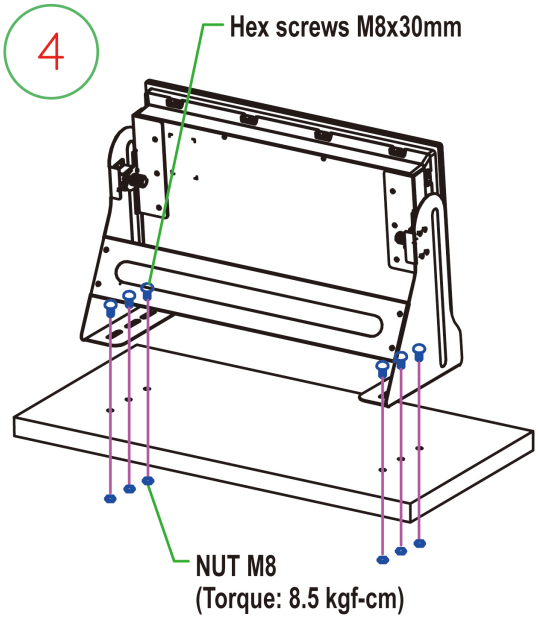

MD-226 and MD-224

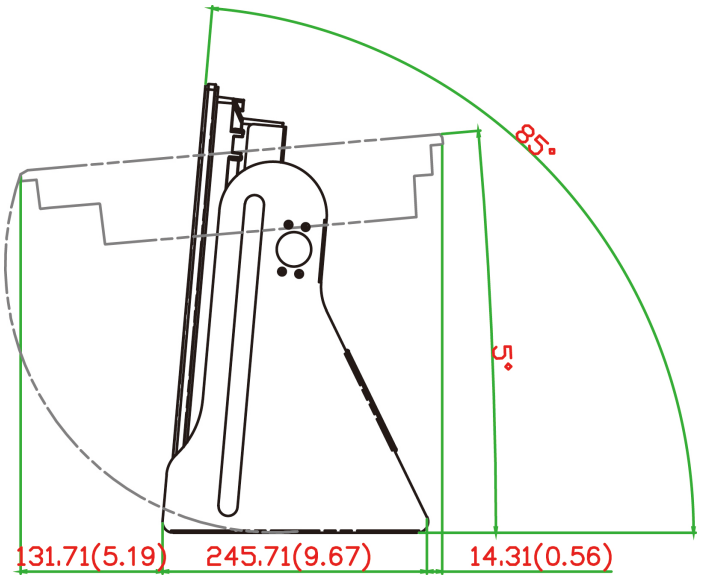

MD-219

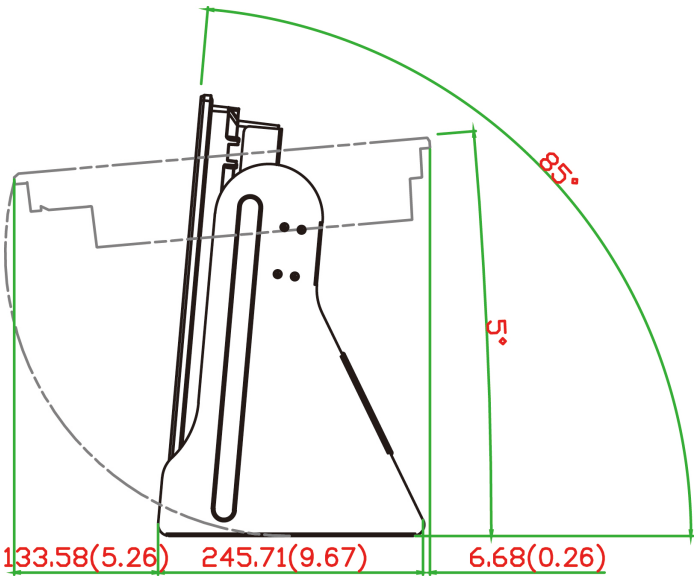

Place your MD-200 series display on a clean, flat, well-ventilated desktop. For proper ventilation, leave some space between the MD-200 series display and other equipment.

ATTENTION

Do NOT place equipment or objects on top of the MD-200 series display. Doing so might damage internal components.

Panel Mounting

The MD-200 series display comes with 14 optional clamp mounts that enable you to install the unit onto a wall (where space has been cut out to accommodate the rest of the hardware) or into computing stations where a flush mount is needed.
For a secure mounting, use all 14 clamps (for MD-226 and MD-224 models) or 10 clamps (for MD-219 models). The clamp arms are fastened into slots on all four sides of the MD-200 series display.

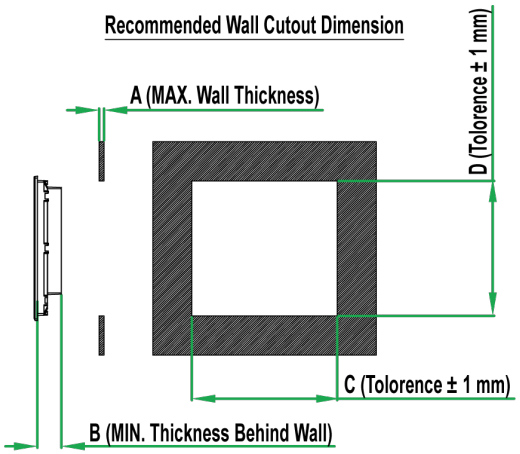

Model	A	B	C	D	Mounting Kits (pcs)
MD-226	14.0 mm	81.3 mm	609.0 mm	423.0 mm	14
MD-224	11.0 mm	65.0 mm	581.0 mm	374.0 mm	14
MD-219	12.0 mm	65.0 mm	411.0 mm	368.0 mm	10

To fasten the clamp arms to the MD-224 mounting slots as shown in the following figure, use the short M4 SUS (stainless) screws. Then, use the clamps to fasten the display to its mounting point. Note the torque values shown in the figure.

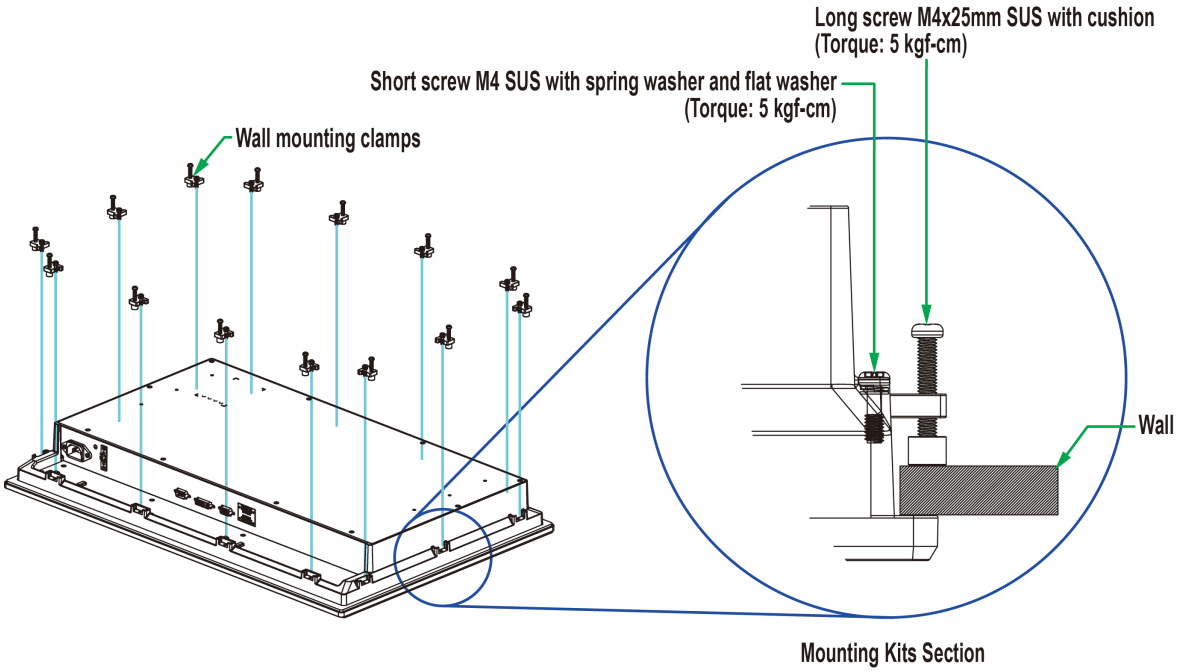

VESA Mounting

The MD-200 series also comes with an optional VESA mounting kit. Six flat-headed screws and four round screws are required to fasten the VESA mounting bracket. See the following figure for detailed screw specifications and torque values.

Four additional screws (not included in the kit) are required to mount the unit on a VESA rack. Use M6 screws with a length between 10 and 12 mm.

MD-226

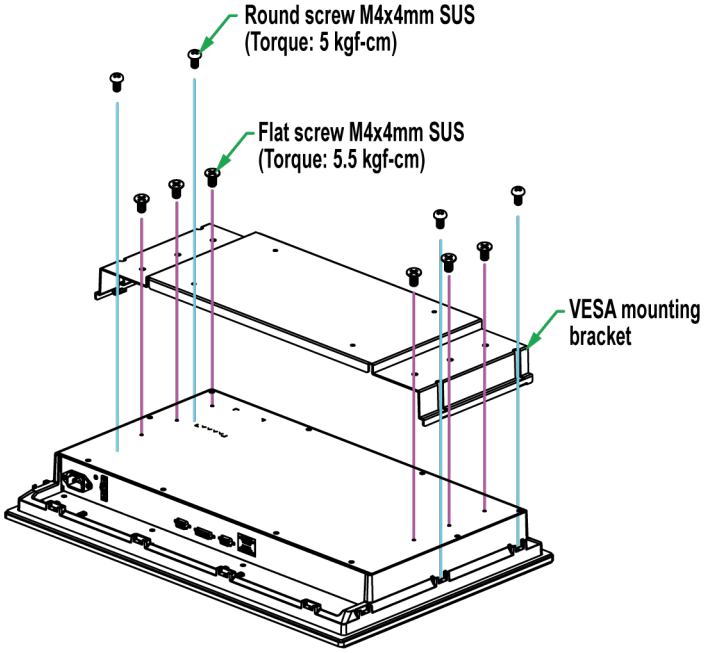

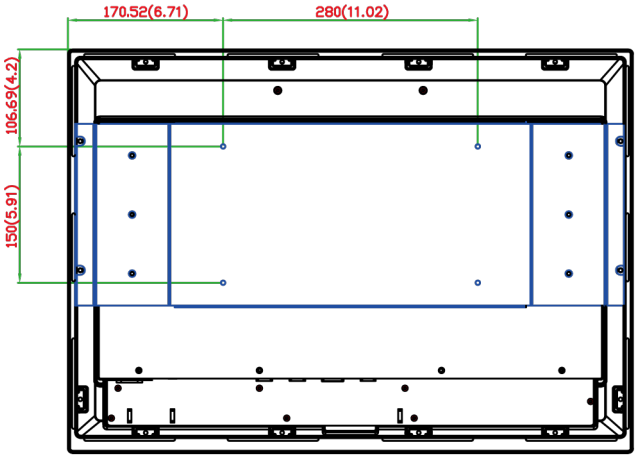

VESA Mounting Kit
4xM6 max. 10 mm deep mounting holes

MD-224

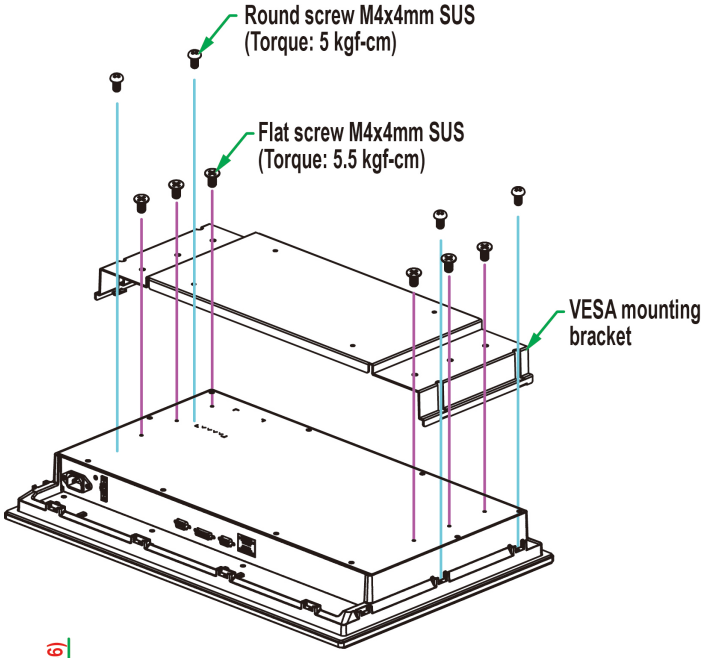

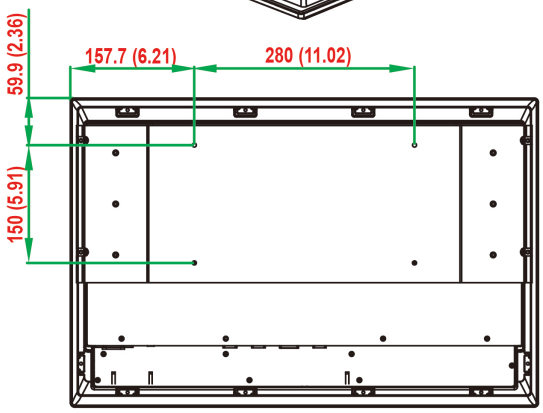

VESA Mounting Kit
4xM6 max. 10 mm deep mounting holes

MD-219

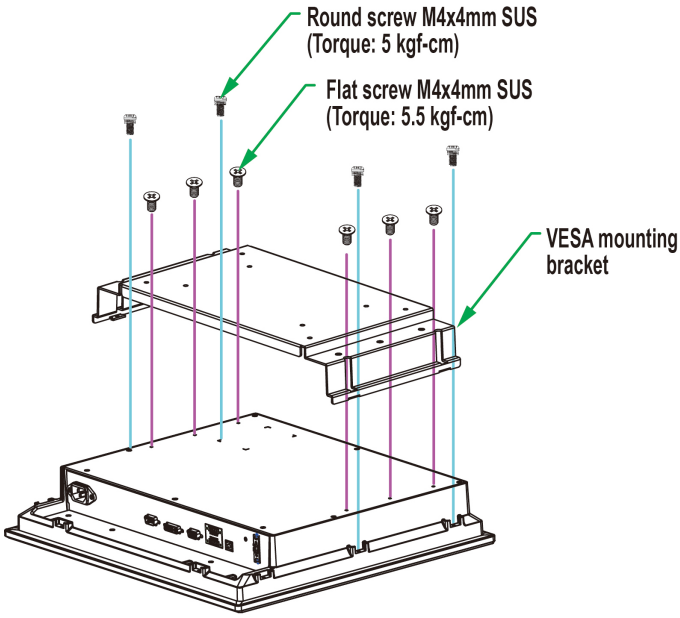

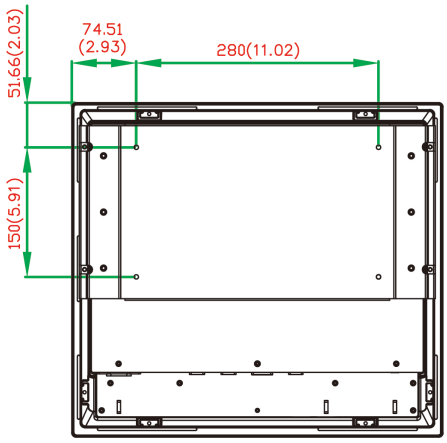

VESA Mounting Kit
4xM6 max. 10 mm deep mounting holes

ATTENTION

Safety First!

Be sure to disconnect the power cord before installing and/or wiring your MD-200 series display.

Wiring Caution!

Calculate the maximum possible current in each power wire and common wire. Observe all electrical codes dictating the maximum current allowable for each wire size. If the current goes above the maximum ratings, the wiring could overheat, causing serious damage to your equipment.

Temperature Caution!

Take care when handling the unit. When the unit is plugged in, the internal components generate heat, and consequently the outer casing may feel hot to the touch.

We recommend taking the following precautions to minimize heat build-up within the unit:

- Position the unit within ±40° of the vertical.
- Install an external fan to increase airflow upwards through the unit if (a) the unit is not positioned within ±40° of the vertical, (b) the ambient temperature exceeds 25°C, or (c) the unit is used in a location with minimal ventilation.

Important Safety Precaution

Even though the unit is rated to operate within the IEC 60945standard of -15 to 55°C for marine applications, it is best to ensure that the ambient temperature does not exceed 25°C. Doing so will increase the life of your unit and minimize service costs.

Grounding the MD-200 Series Display

Make sure that you ground the MD-200 series display before powering it on. Grounding and wire routing help limit the effects of noise due to electromagnetic interference (EMI). Run the ground connection from the ground screw to the grounding surface prior to connecting the power.

ATTENTION

This unit is intended to be mounted to a well-grounded mounting surface, such as a metal panel.

Earth Ground: See the following figure for the location of the earth grounding connector. Connect the grounding wire to an appropriate grounded metal surface.

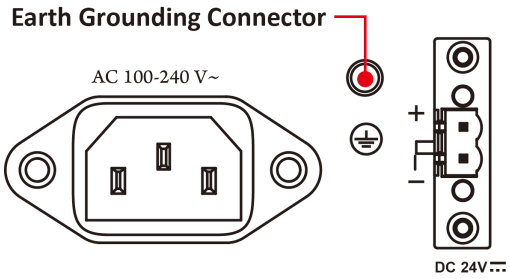

Powering On the MD-200 Series Display

1. Connect the MD-200 series display to a power source, do one of the following:
   - Connect the **Terminal Block to Power Jack Converter** to the MD-200 series DC terminal block (located on the bottom panel) and then connect a power adapter.
   - Connect the MD-200 series display to a power source using the AC power cord.
2. Touch the **MENU** button (on the lower right hand corner of the display panel) for about one second or use a UART command (MCC-0x9F-Power Down/Up Display) to turn on the MD-200 series display.

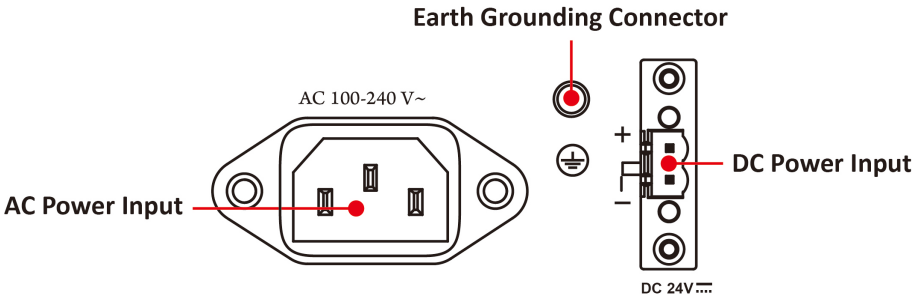

Powering Off the MD-200 Series Display

To power off the MD-200 series display, touch the **MENU** button for about four seconds until the green LED light of the MENU button turns off, or use a UART command (MCC-0x9F-Power Down/Up Display) to turn off the MD-200 series display.

NOTE If the MD-200 series display is powered using a DC converter, an “N/A” message appears when the INFO dialog displays the AC power status and vice versa. This does not affect the normal operation of the MD-200 series display.

SavvyTouch Display Control Buttons

The MD-200 series display comes with five SavvyTouch display control buttons on the front panel. These intelligent controls turn on as your hand draws near the area of the screen where they are located.

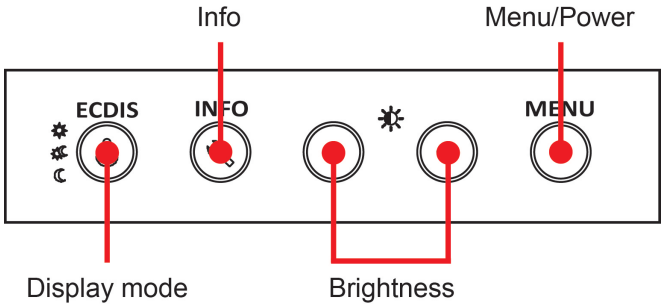

MENU

To configure the panel display settings, open the on-screen display (OSD) configuration panel by pressing the **MENU** button. The LCD panel displays a configuration menu superimposed over the currently displayed image.

Use the **MENU** button to open and close the OSD, and use the brightness buttons "+/-" to navigate through the OSD menus. On the OSD MAIN MENU page, the MENU button is also used to *confirm* a function.

The **MENU** button operates like a power button. For more information, refer to the sections “Powering On the MD-200 Series Display” and “Powering Off the MD-200 Series Display.”

Brightness

Two brightness buttons are available for brightness control. Press the **+** button to increase the brightness of the panel; press the **–** button to decrease the brightness of the panel. On the OSD MAIN MENU page, the + and - buttons are used to increase or decrease values, and to move up or down between options.

INFO

The **INFO** button indicates the display status for power components, including AC and DC.

"Pass" indicates that the display is working properly. "N/A" indicates that the AC or DC power is not working properly.

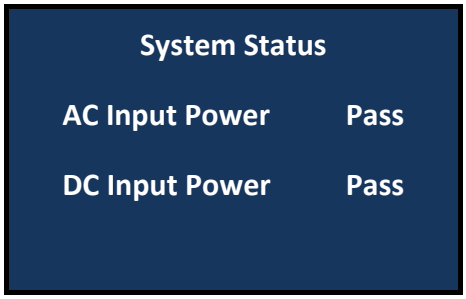

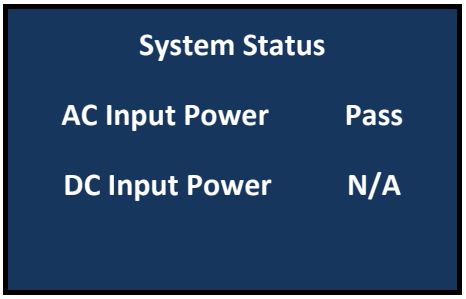

NOTE If the MD-200 series display is powered using a DC converter, an "N/A" message appears when the INFO dialog displays the AC power status and vice versa. This does not affect the normal operation of the MD-200 series display.

ECDIS

Use the **ECDIS** button to set ECDIS settings for maritime applications. Touch the button to switch between the three different brightness modes (DAY, DUSK, and Night).

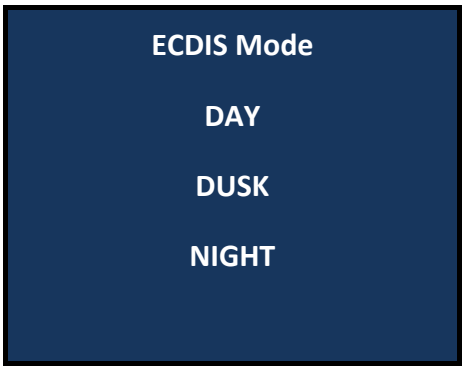

NOTE Setting an ECDIS mode overrides the unit's current brightness setting.

Connecting Data Transmission Cables

Connect a serial cable to the serial port on the unit. The serial port uses a male DB9 connector and terminal block.

The following figures show the pin assignments.

DB9 Male Port

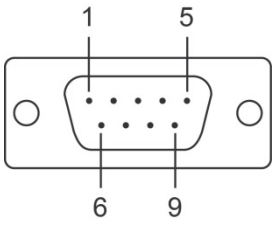

RS-232 (DB9 Male) Pinouts

Pin	RS-232
1	DCD
2	RxD
3	TxD
4	DTR
5	GND
6	DSR
7	RTS
8	CTS

Terminal Block Port

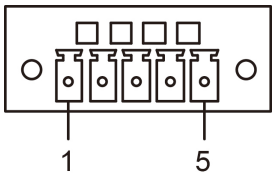

RS-422/485 (Terminal Block) Pinouts

Pin	RS-422	RS-485 (4-wire)	RS-485 (2-wire)
1	RxDB(+)	RxDB(+)	–
2	RxDA(-)	RxDA(-)	–
3	TxDB(+)	TxDB(+)	DataB(+)
4	TxDA(-)	TxDA(-)	DataA(-)
5	GND	GND	GND

Configuring the RS-232/RS-422/RS-485 Serial Ports

You can configure serial port using a UART command or OSD control. Only one of the three interfaces (RS-232, RS-422, or RS-485) can be used at a time.

For more information about configure the serial port on the MD-200 series display, see **Appendix B: On-Screen Display (OSD) Controls** and **Appendix C: Display UART Commands.**

Enabling the Touch Screen Function (Z models only)

The Z model of the MD-200 series display comes with a USB port on the bottom panel. You can use the USB port to connect the touch screen interface to a computer's peripheral device manager. To enable the touch screen function on the Z model of the MD-200 series display, use a Type A male to Type B male USB cable to connect the USB port to a peripheral device input on a computer, laptop, or embedded computer.

Microsoft® Windows® 7 and above come pre-installed with Windows HID drivers that fully support multi-touch functions. No additional driver installation is required.

However, support for the touch screen function in Microsoft® Windows® XP and older versions requires additional driver installation. The MD-200 series software CD includes drivers for the touch screen function. To install a driver, insert the software CD into the computer and select your operating system. After the driver is installed, you can start using the touch screen feature on the Z model of the MD-200 series display. (Note: High brightness models MD-219Z-HB and MD-224Z-HB do not come with a software CD.)

Connecting Video Input Cables

The MD-200 series display comes with VGA and DVI-D inputs, allowing you to connect two computers or laptops to the unit.

The following figure shows the pin assignments.

VGA Connector

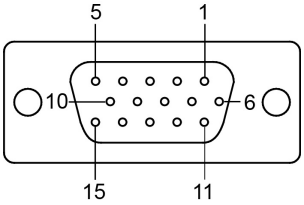

Pin No.	Signal Definition
1	Red
2	Green
3	Blue
4	NC
5	GND
6	GND
7	GND
8	GND
9	VCC
10	GND
11	NC
12	DDC Data
13	HSYNC
14	VSYNC
15	DDC Clock

DVI-D Connector

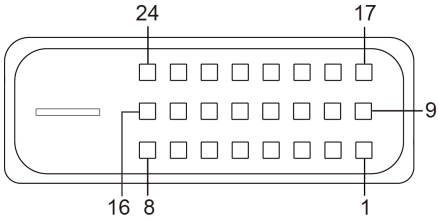

Pin No.	Signal Definition
1	T.M.D.S. Data2-
2	T.M.D.S. Data2+
3	T.M.D.S. Data2/4 Shield
4	N/C
5	N/C
6	DDC Clock
7	DDC Data
8	Analog Vertical Sync
9	T.M.D.S. Data1-
10	T.M.D.S. Data1+
11	T.M.D.S. Data1/3 Shield
12	N/C

Pin No.	Signal Definition
13	N/C
14	+5V Power
15	Ground (return for +5V, HSync, and VSync)
16	Hot Plug Detect
17	T.M.D.S. Data0-
18	T.M.D.S. Data0+
19	T.M.D.S. Data0/5 Shield
20	N/C
21	N/C
22	T.M.D.S. Clock Shield
23	T.M.D.S. Clock+
24	T.M.D.S. Clock-

Connecting the Built-in Buzzer

The MD-200 series display comes with a built-in buzzer terminal block located on the bottom of the unit. You can connect the buzzer terminal block to a computer, which sends a signal to trigger the buzzer on the MD-200 series display.

Buzzer

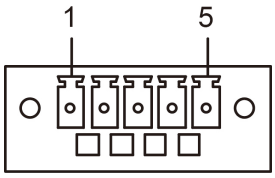

Buzzer Pinouts

Pin	Buzzer
1	GND
2	BUZ+
3	GND
4	–
5	GND

4

Touch-Screen Function

This chapter describes how to install the driver for the touch-screen function and perform screen calibration on the Z model of the MD-200 series display.

This chapter includes the following topics:

- **Installing Touch Function Driver**
- **Performing Screen Calibration**

Installing Touch Function Driver

The Z model of the MD-200 series display includes the touch screen function. If you are using Windows XP or older, you must install a driver before you can use the touch screen feature. The MD-200 series software CD includes the required drivers.

NOTE High brightness models MD-219Z-HB and MD-224Z-HB do not come with a software CD.

To install the driver for the touch screen feature, complete the following steps.

For MD-224Z multi touch models, take the following steps to install the touch function driver. The driver file can be found on the product DVD.

1. Insert the MD-200 series software CD into your computer.
2. Locate the folder **eGalaTouch_7_Vista_XP_2K_5.11.0.9126** on the software CD.
3. Double-click **setup.exe**. A Welcome screen appears.
4. Click **Next** to continue.

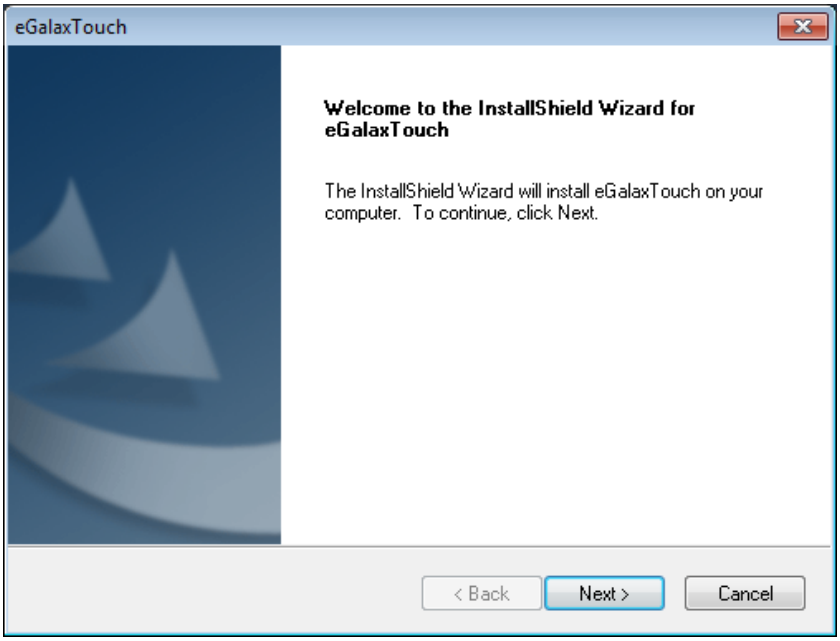

5. Click **Next** to continue. You do not need to install the PS/2 interface driver.

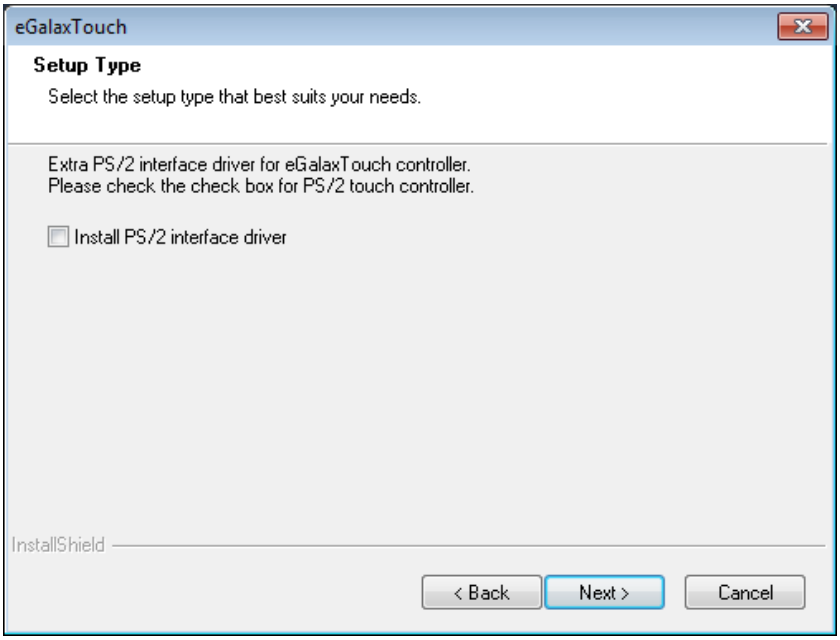

6. Select the **Install RS232 interface drive** check box and click **Next**.

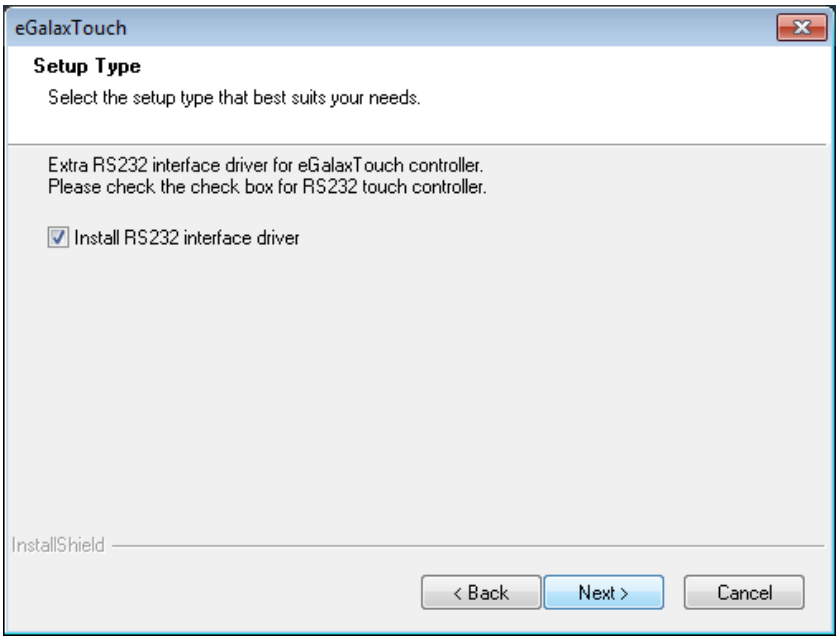

7. Select a screen calibration option and click **Next**.

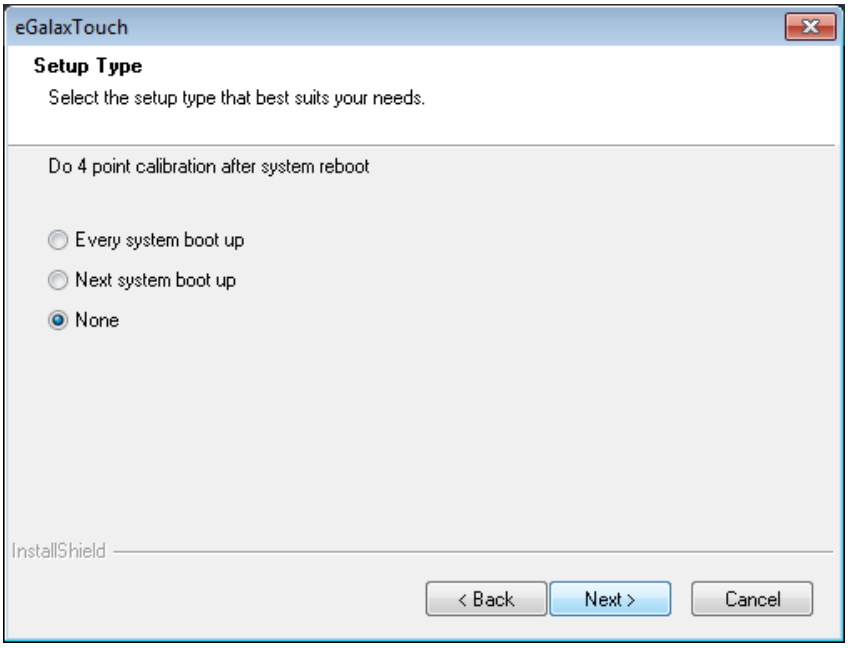

8. If you want to use the touch function, make sure that the touch controller's USB cable is connected to the MD-200 series display. Click **OK** to continue.

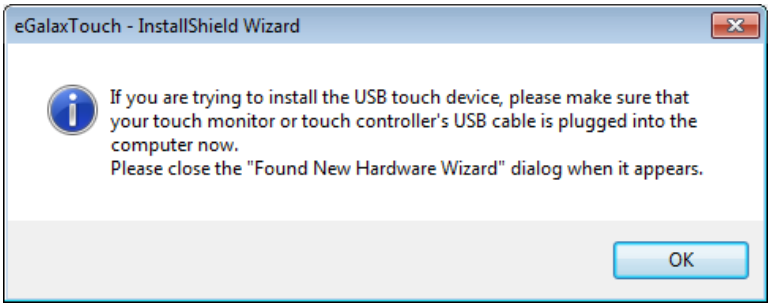

9. If needed, select the **Support Mulit-Monitor System** checkbox. Click **Next** to continue.

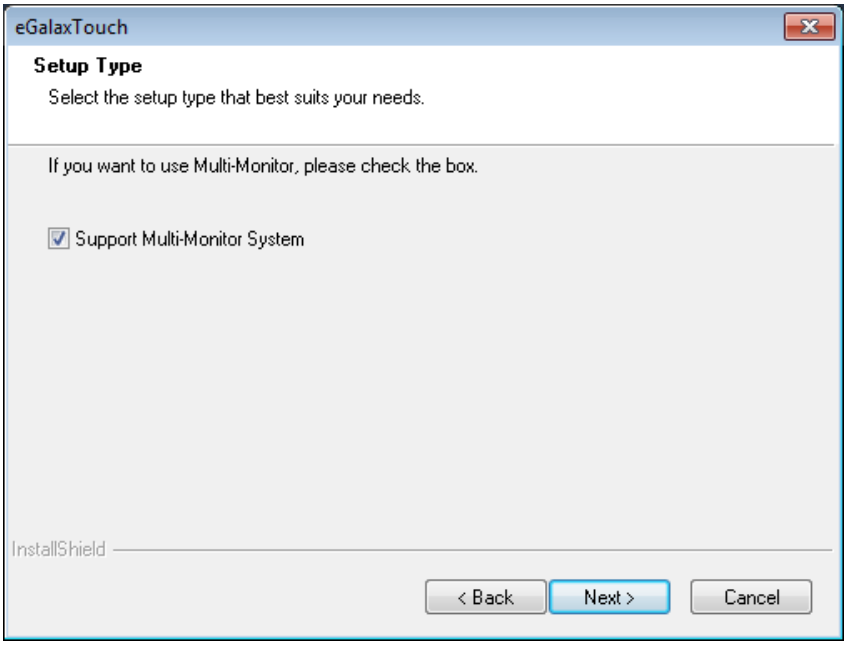

10. Accept the default destination folder or click **Browse** to select one. Click **Next** to continue.

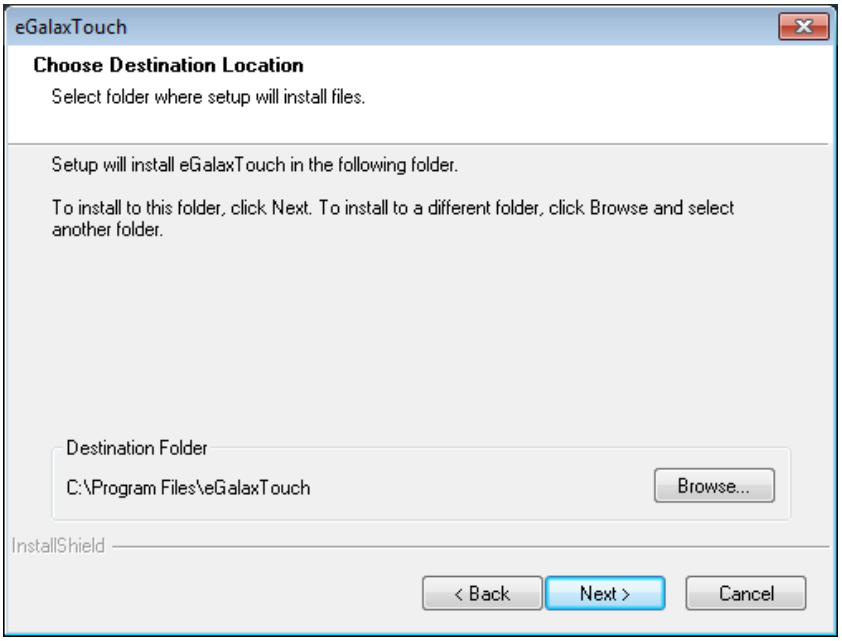

11. Click **Next** to continue.

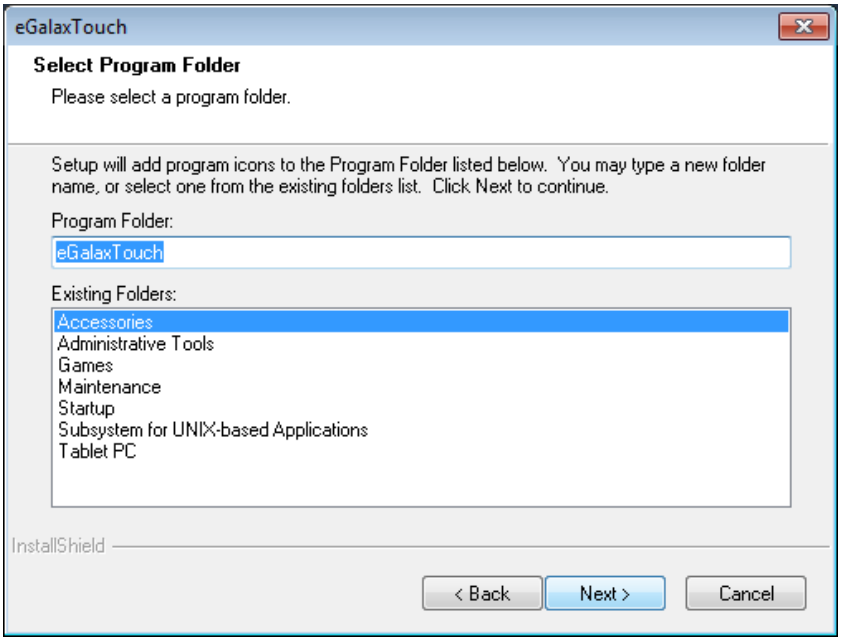

12. If needed, select the **Create a eGalaxTouch Utility shortcut on desktop** checkbox. Click **Next** to continue.

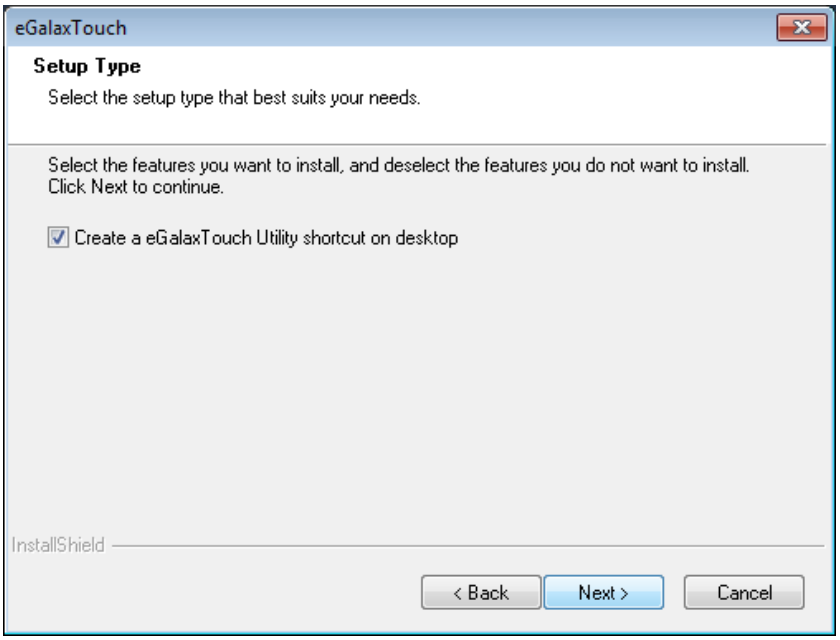

13. Wait until the installation process is complete.

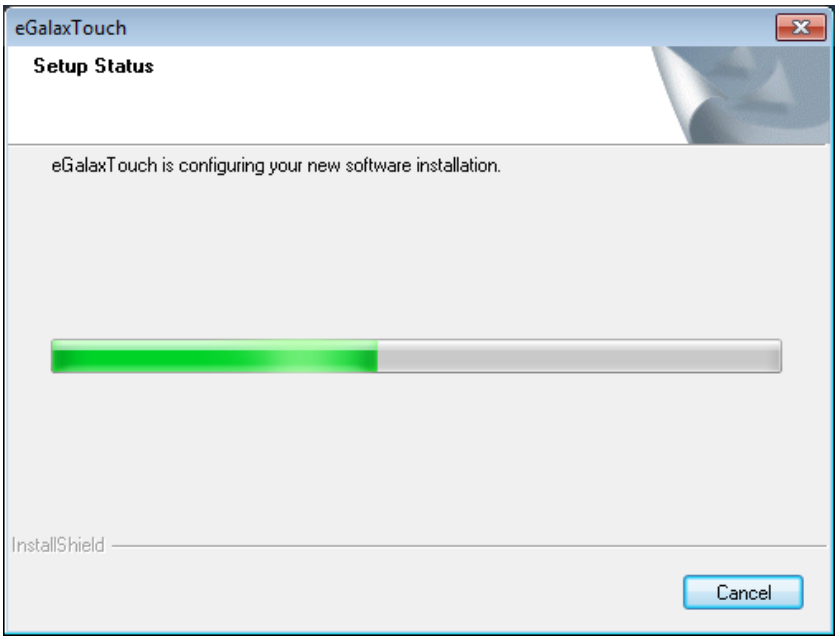

14. After the driver is installed, click **Yes** to perform a 4 point calibration for the touch screen function.

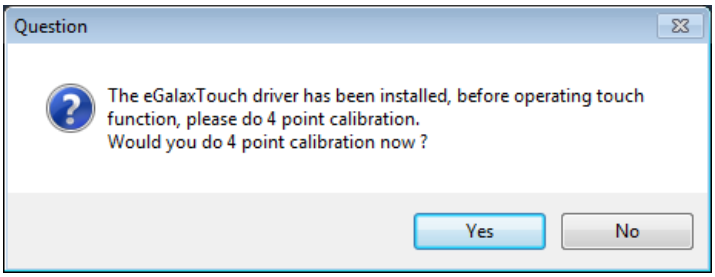

15. Click the circle in the corner until it shows **OK**.

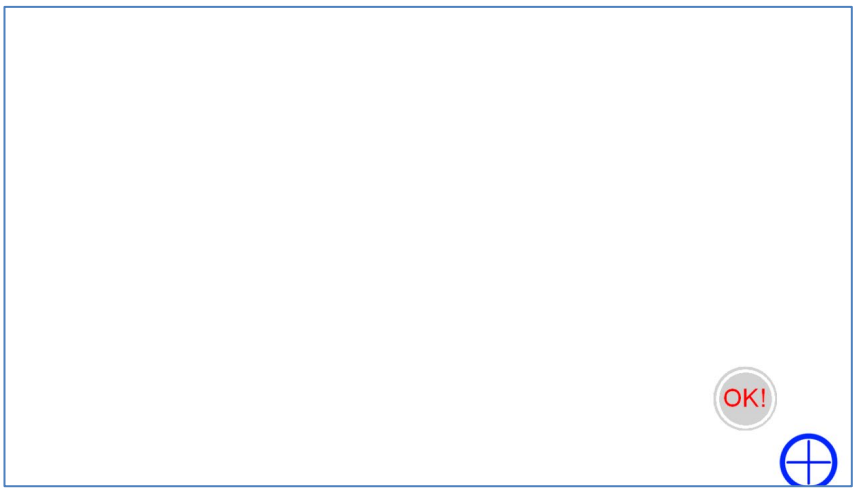

16. Click **OK** to complete the installation process.

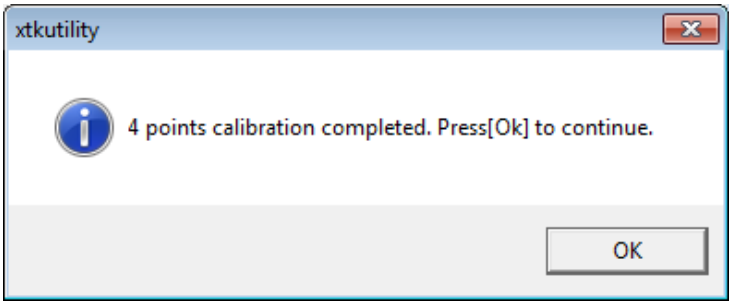

Performing Screen Calibration

If you change the display resolution on the Z model of the MD-200 series display, you must perform a 4-point screen calibration for the touch screen function to work properly.

To perform a 4-point calibration, complete the following steps:

1. On the computer desktop, double-click the **eGalaxTouch** icon.

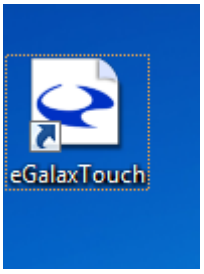

2. Select the **Tools** tab and click **4 Points Calibration**.

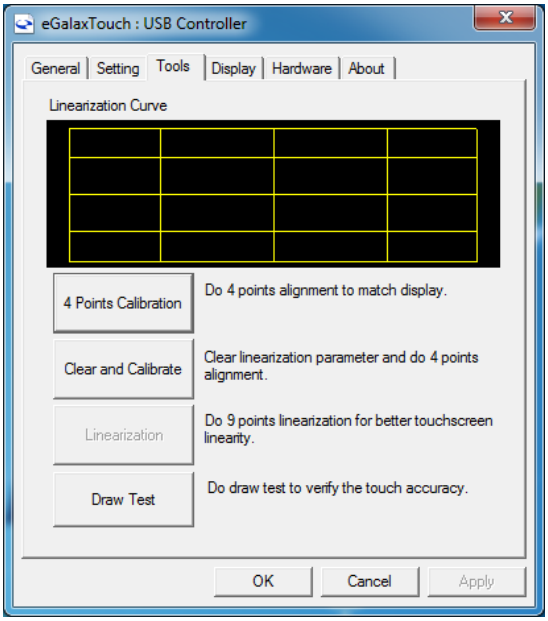

3. Click the circle in the corner until it shows **OK**.

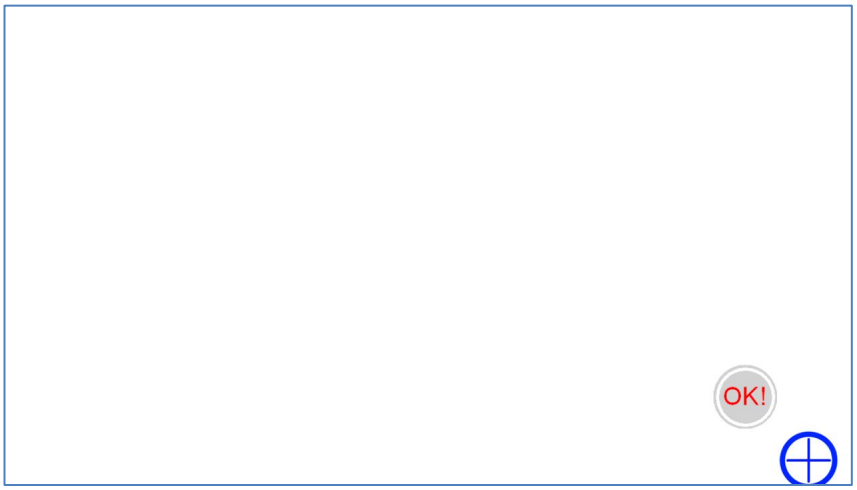

4. Click **OK** to complete the process.

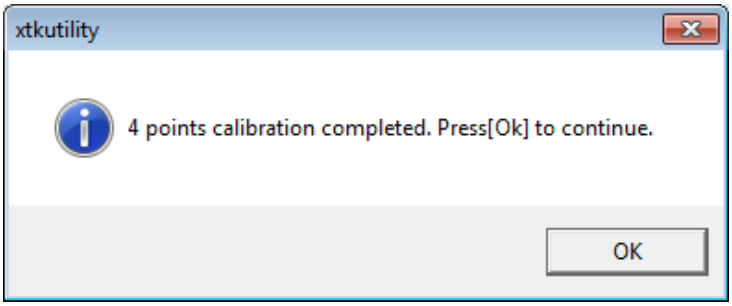

5

Display Control Interface

The MD-200 series display includes a UART interface that provides system designers with a convenient method of developing custom software controls for the display panel.

For details, please refer to the **Serial Communication Control Interface** manual.

A

Regulatory Approval Statement

This device complies with part 15 of the FCC Rules. Operation is subject to the following two conditions: (1) This device may not cause harmful interference, and (2) this device must accept any interference received, including interference that may cause undesired operation.

Class A: FCC Warning! This equipment has been tested and found to comply with the limits for a Class A digital device, pursuant to part 15 of the FCC Rules. These limits are designed to provide reasonable protection against harmful interference when the equipment is operated in a commercial environment. This equipment generates, uses, and can radiate radio frequency energy and, if not installed and used in accordance with the instruction manual, may cause harmful interference to radio communications. Operation of this equipment in a residential area is likely to cause harmful interference in which case the user will be required to correct the interference at his/her own expense.

European Community

Warning:

This is a class A product. In a domestic environment this product may cause radio interference in which case the user may be required to take adequate measures.

B

On-Screen Display (OSD) Controls

This appendix discusses how to navigate and use the On-screen Display (OSD) menu to adjust image properties on the MD-200 series display.

The following topics are covered in this appendix:

- **Opening the Configuration Screen**
- **OSD Menu Description**
  - Source – Auto Source
  - Image Setting – Auto Setup
  - Image Setting – Display
  - Color Mode – Color Temperature
  - Color Mode – Color Temperature – User
  - Management – Communication
  - OSD Misc – OSD Position
  - OSD Misc – Language
  - OSD Misc – Preset Save
  - OSD Misc – OSD Lock Mode
  - Service
  - Service – Test Pattern

Opening the Configuration Screen

The OSD controls consist of five control buttons: MENU, BR+/-, Info, and ECDIS.

To configure the panel display settings, press the **MENU** button to access the on-screen display (OSD) menu. The LCD panel will display a configuration menu superimposed over the currently displayed image.

OSD Menu Description

Source – Auto Source

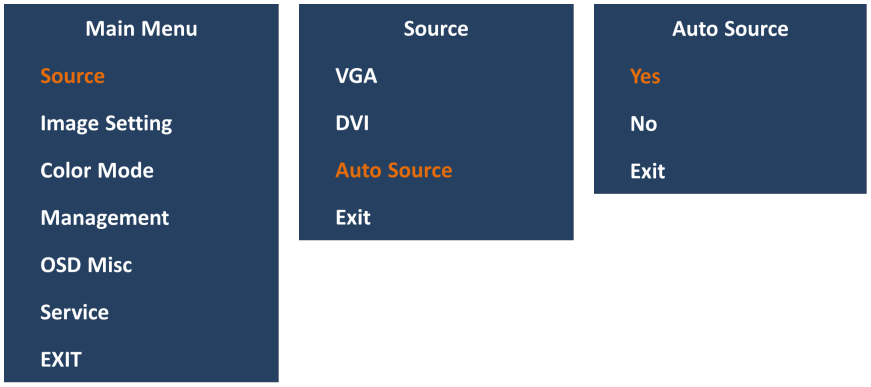

Use the **Source** menu to select a signal source input. The following list shows the options:

- VGA: Set signal source to VGA.
- DVI: Set signal source to DVI.
- Auto Source: When you set the **Auto Source** value to **Yes**, the MD-200 series display automatically searches for and selects a signal source. The default value is **Yes**.

NOTE If the "auto source" function is turned off, the user cannot switch the input source using the OSD menu when it's connected to the wrong input source.

Image Setting – Auto Setup

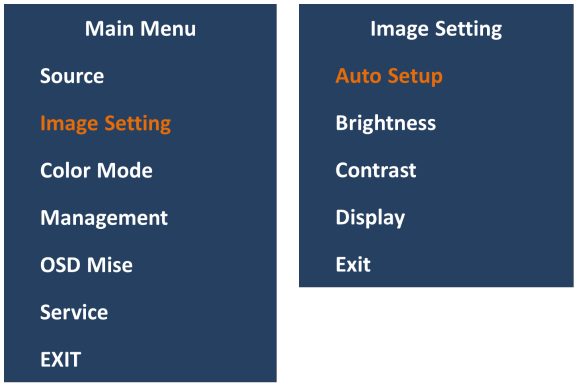

Use the **Image Setting** menu to configure the following visual settings:

- Auto Setup: Automatically fit or reset the current signal and adjust the image. This option is available only for VGA signal source.
- Brightness: Increase or decrease the display brightness. The range of values is from 0 to 255. The default value is 160.
- Contrast: Increase or decrease the display contrast. The range of values is from 0 to 100. The default value is 0.

Image Setting – Display

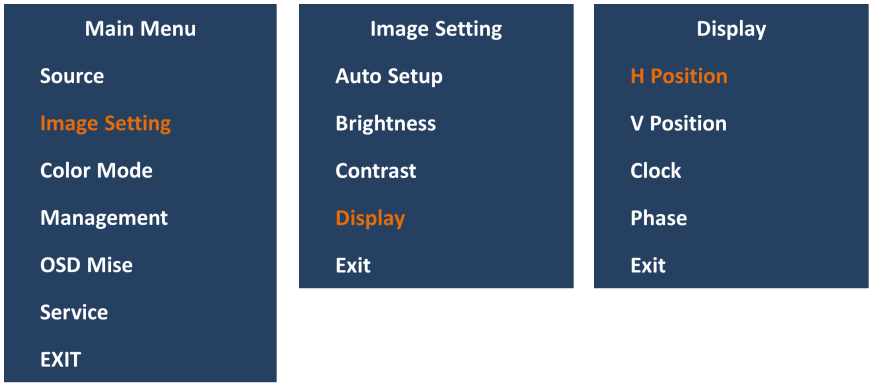

Select **Image Setting > Display** to specify the following VGA signal settings:

- H Position: Move image horizontally (left or right).
- V Position: Move image vertically (up or down).
- Clock: Adjust the horizontal frequency (clock) of the analog signal.
- Phase: Adjust the data sampling position. This may affect image quality.

Color Mode – Color Temperature

Select **Color Mode > Color Temperature** to select one of the following color temperature (Kelvin degrees) to display an image:

- 9300K = Cool, a bluish white.
- 7500K = Neutral, a white close to natural light.
- 6500K = Warm, a reddish white (default value).

Color Mode – Color Temperature – User

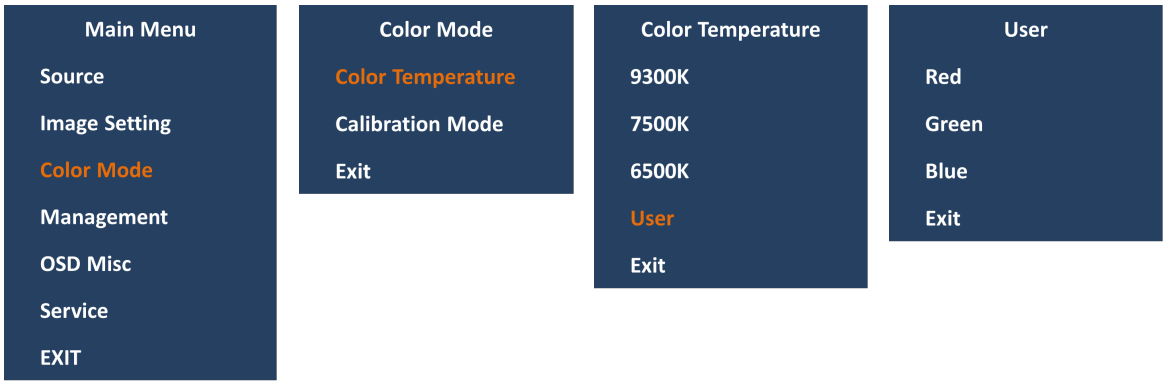

Select **Color Mode > Color Temperature > User** to set the values for the Red, Green and Blue color gains. The range of values is from 0 to 100. The default value is 100.

Management – Communication

Select **Management > Communication** to set up serial communication mode for remote control or for accessing internal information about the unit, including brightness, firmware version, and other values.

- RS232: Use standard RS-232 protocol using a DB9 connector.
- RS422: Use standard RS-422 protocol through the terminal block connector.
- RS4852W: Use RS-485 protocol (Half duplex) through the terminal block connector.
- Address RS: Set the unit address (0x00 to0x0F).

OSD Misc – OSD Position

Select **OSD Misc > OSD position** to set the visual appearance of the On Screen Display (OSD) menu.

- OSD H.Position: Adjust the OSD menu horizontally (left or right), values from 0 to 100.
- OSD V.Position: Adjust the OSD menu vertically (up or down), values from 0 to 100.
- The default value for both functions is 100.

OSD Misc – Language

Select **OSD Misc > Language** to set the language to be used for all text and warnings in the OSD menu.

- English: Display the OSD menu in English.

OSD Misc – Preset Save

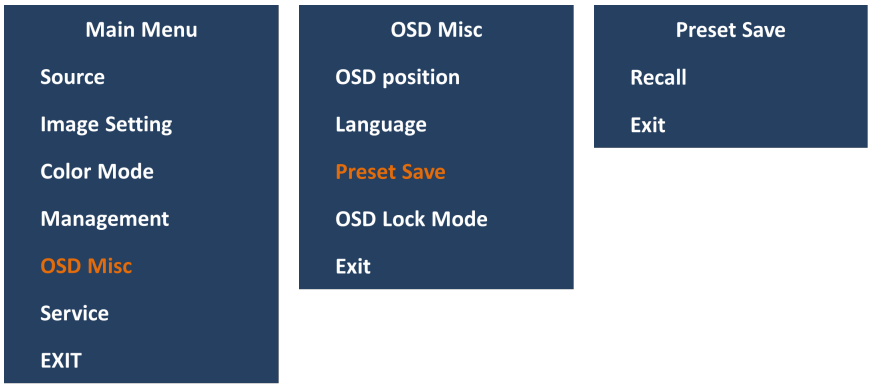

Select **OSD Misc > Preset Save** to reset the OSD menu back to the factory default settings.

- Recall: Restores back to the factory default settings.

OSD Misc – OSD Lock Mode

Select **OSD Misc > OSD Lock Mode** to control access to the OSD menu.

- Normal Mode: Display the OSD menu by touching the MENU button on the front panel. This is the default setting.
- Password Protect: Prompt for a password before displaying the OSD menu. The default password is 321.
- Change Password: Change the password to access the OSD menu. Use the BR+/- and MENU buttons to change and confirm the password.

Service

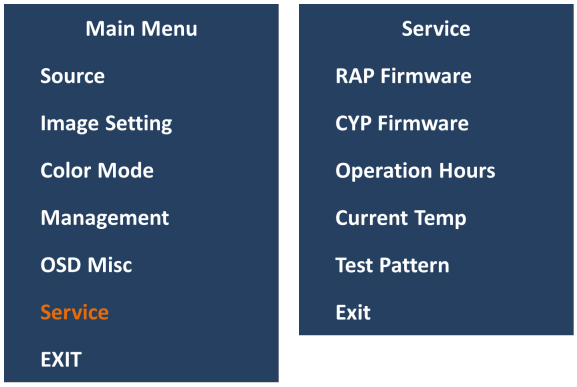

Use the **Service** menu to view the following information about the unit:

- RAP Firmware Rev: Display the scalar firmware version. For example, Ver. 1.0.0.
- CYP Firmware Rev: Display the touch keypad firmware version. For example, Ver. 1.0.0.
- Operation Hours: Display the time elapsed. For example, 0 Year 1 Hour 30 Minute.
- Current Temperature: Display the internal temperature measured by the on-board sensor. For example, “35 C”, in degrees Celsius or “53 F”, in degrees Fahrenheit.
- Test Pattern: Display the internal test pattern image for troubleshooting.

Service – Test Pattern

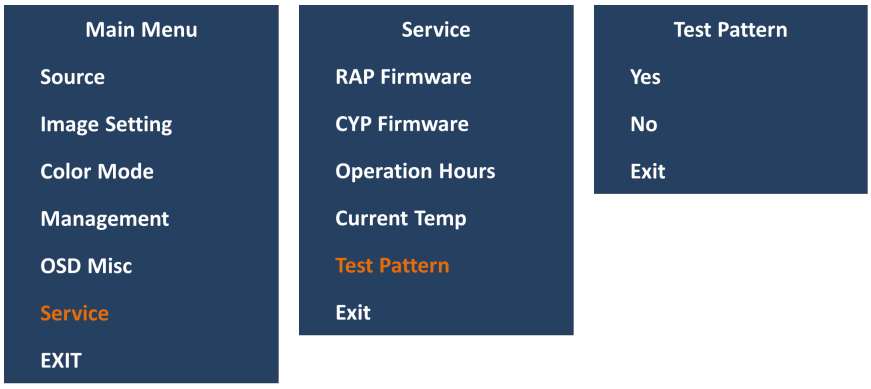

Select **Service > Test Pattern** to show the internal test pattern with color boxes for White, Black, Red, Green, Blue and check for deviations in the TFT panel or display controller behavior. The test pattern is independent of the resolution or specifications of the signal input. The test pattern is generated internally in the display controller and is transmitted directly (1:1 ratio) to the TFT panel.